Meritor CS9A Air Suspension

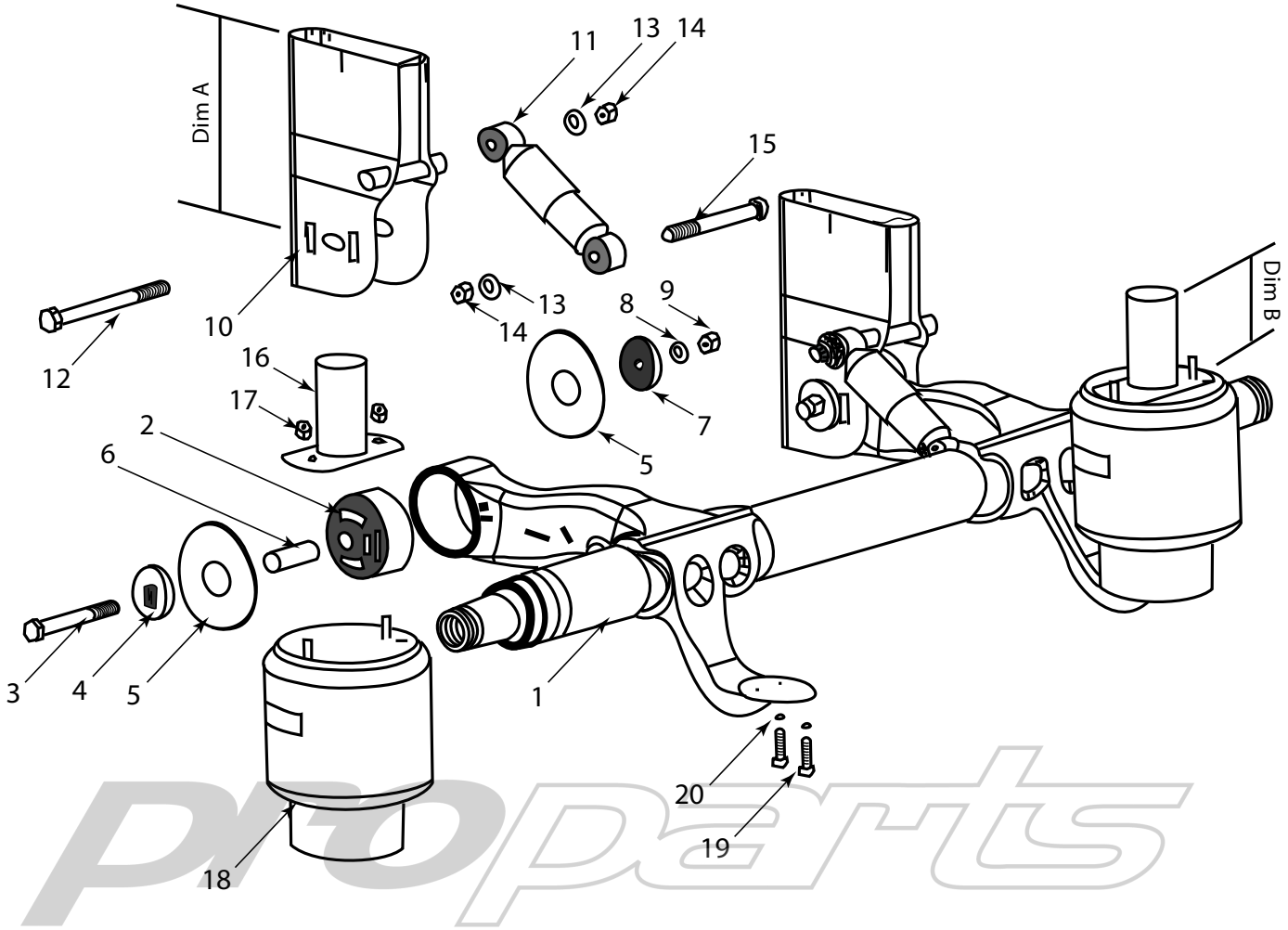

Item	Part Number	Description	Item	Part Number	Description
1	AM10230319SA	Axle Assy c/w Bushed Trailing Arms, Brake Spiders & S Cams	10	See Table Below	Hanger Bracket
			11	AM21228392	Shock Absorber
			12	AM21228304	Shock Bolt - Upper
2	AM21226997	Pivot Bushing	13	AM99513007	Washer M24
3	AM21222230	Pivot Bolt	14	AM99527004	Hex Nut M24
4	AM21228664	Eccentric Alignment Boss	15	AM21216189	Shock Bolt - Lower
5	AM21226663	Wear Washer	16	See Table Below	Air Spring Pedestal
6	AM21229152	Pivot Bush Sleeve	17	AM99544001	Hex Nut M12
7	AM21228663	Concentric Alignment Boss	18	AM21229214/9626	Air Spring
8	AM21222923	Washer M24	19	AM99526002	Retaining Screw M12
9	AM99527004	Hex Nut M24	20	AM99510003	Washer

Hanger Brkt L/H	Hanger Brkt R/H	Dim A	Pedestal	Dim B	Ride Height +/-25mm
AM21228876	AM21228877	175	AM21229119	8	200
AM21229385X	AM21229386X	200	AM21229120	25	225
AM21228878	AM21228879	225	AM21229121	50	250
AM21229387X	AM21229388X	250	AM21229122	75	275
AM21228880	AM21228881	275	AM21229123	100	300
AM21229389X	AM21229390X	300	AM21229124	125	325
AM21228882	AM21228883	325	AM21229125	150	350
AM21229391X	AM21229392X	350	AM21229126	175	375

Hendrickson HT230 Air Suspension

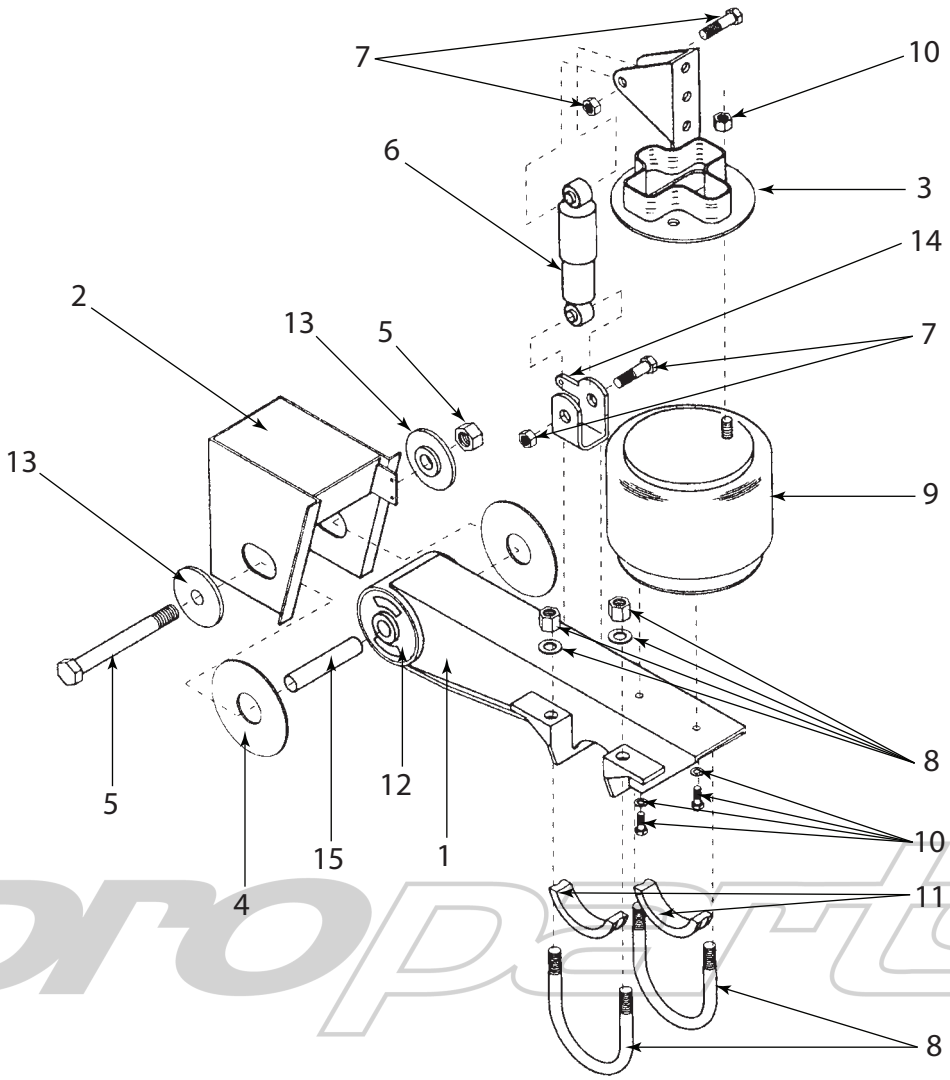

Item	Part Number	Description	Item	Part Number	Description
1	D-20000-1	Beam Assembly - L.H.	10	A-20033	Air Spring Bolt Kit
	D-20000-2	Beam Assembly - R.H.	11	B-20701	Axle Spacer - U Bolt
2	D-21179-1	Hanger - L.H. - 15” Ride Ht	12	C-3558	Tri Functional Bush
	D-21165-1	Hanger - L.H. - 17” Ride Ht		A-6914	Bush Kit - Non Quik Align
	D-21179-2	Hanger - R.H. - 15” Ride Ht			c/w S-3646 x 1 & S-21099 x 2
	D-21165-2	Hanger - R.H. - 17” Ride Ht		S-31624	Bush Kit - Quik Align
3	S-21257-1	Upper Shock Brkt - L.H. 15”			c/w S-31623 x 1 & S-21099 x 2
	C-20012-1	Upper Shock Brkt - L.H. 17”	13	B-2770-2P	Alignment Collar - Non Quik-
	S-21257-2	Upper Shock Brkt - R.H. 15”			Align (2 Pack)
	C-20012-2	Upper Shock Brkt - R.H. 17”		C-20924	Alignment Collar - Quik Align
4	S-21099-4P	Wear Pad (4 Pack)			- Concentric
5	S-3646	Pivot Bolt Kit - Non Quik Align		C-20925	Alignment Collar - Quik Align
	S-31623	Pivot Bolt - Quik Align			- Eccentric
	S-31625	Pivot Bolt - Quik Align c/w	14	C-20069	Lower Shock Clevis
		Alignment Collars		98544-021	Heavy Duty Lower Shock Clevis
6	S-20889	Shock Absorber			Upgrade Kit
	S-21699	Shock Absorber - Heavy Duty	15	A-2068-001	Delrin Liner - Pivot Bolt
7	A-20031	Bolt Kit - Shock Absorber			
		(Does 2 x Shocks)	*	98690-001	Quik Align Retro Fit Kit
8	S-21140	U Bolt Kit (Kit of 4)			(changes Non Quik Align to Quik
9	C21208	Air Spring Assembly			Align)

Different Options Are Available For Items 2 & 3

Hendrickson HT250U Air Suspension

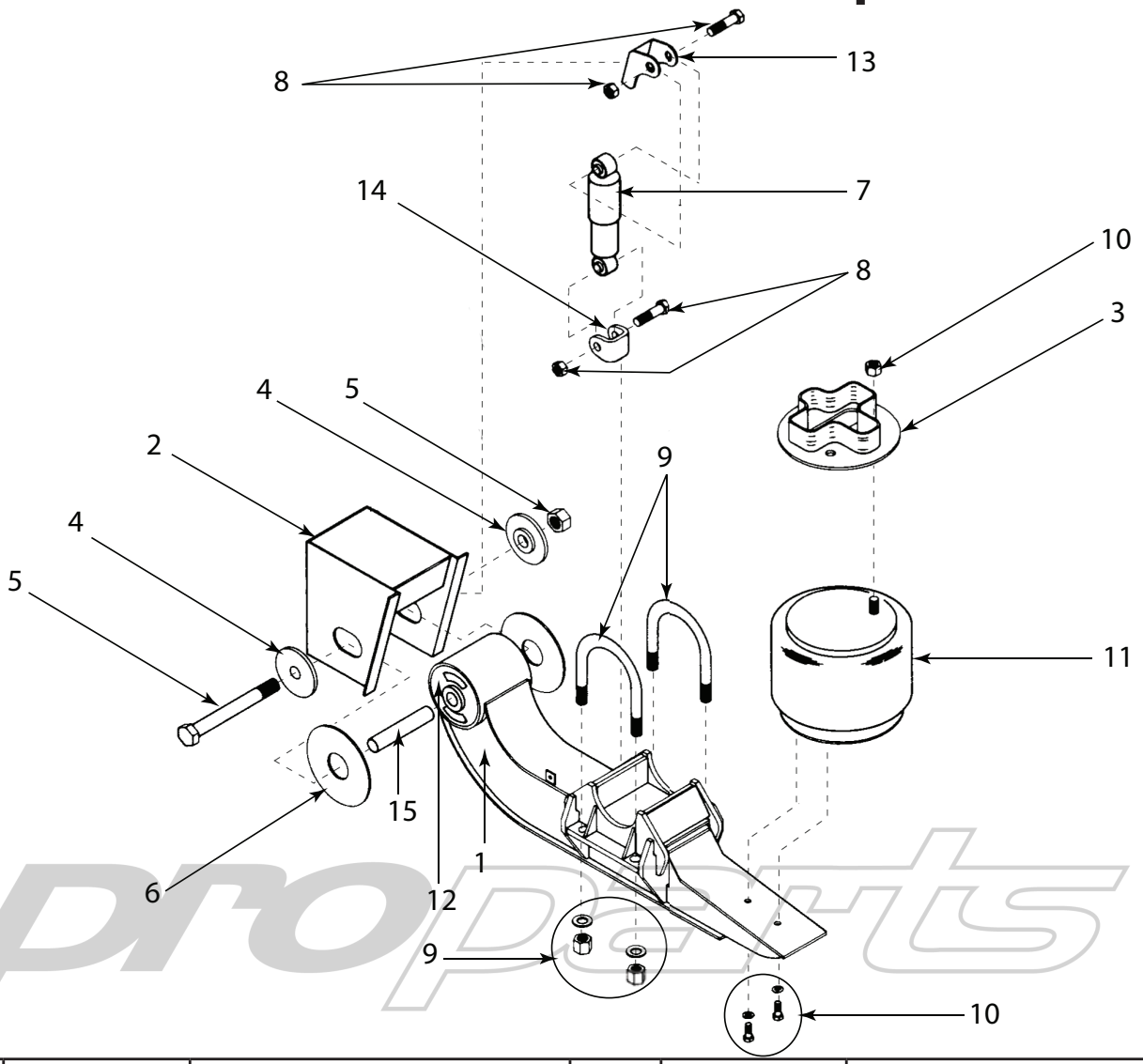

Item	Part Number	Description	Item	Part Number	Description
1	S-20335-1	Beam Assembly - L.H.	6	S-21099-4P	Wear Pad (4 Pack)
	S-20335-2	Beam Assembly - R.H.	7	S-20889	Shock Absorber
2	S-20322-1	Hanger - L.H.		C-14587-8L	Shock Absorber Strap (2 Pack)
	S-20322-2	Hanger - R.H.			
3	S-21210-4	Air Spring Spacer Assembly	8	S-2157	Shock Bolt Kit
	S-21210-3	Air Spring Spacer Assembly	9	FQ8064	U Bolt - 9” x 5” x 7/8” Round
	B-21209	Air Spring Plate Assembly			
4	B-2770-2P	Alignment Collar - Non Quik- Align (2 Pack)	10	A-1981	Air Spring Bolt Kit
			11	C-20124	Air Spring
	C-20924	Alignment Collar - Quik Align - Concentric		C-20127	Air Spring * Check Number on Bag *
	C-20925	Alignment Collar - Quik Align - Eccentric	12	A-6914	Bush Kit - Non Quik Align c/w S-3646 x 1 & S-21099 x 2
5	S-3646	Pivot Bolt Kit - Non Quik Align		S-31624	Bush Kit - Quik Align c/w S-31623 x 1 & S-21099 x 2
	S-31623	Pivot Bolt - Quik Align	13	C-20113	Shock Clevis - Upper
	S-31625	Pivot Bolt - Quik Align c/w Alignment Collars	14	C-2592	Shock Clevis - Lower
			15	A-2068-001	Delrin Liner - Pivot Bolt

#Different Options Are Available For Items 1, 2, 3, 11

Hendrickson HT250US Air Suspension

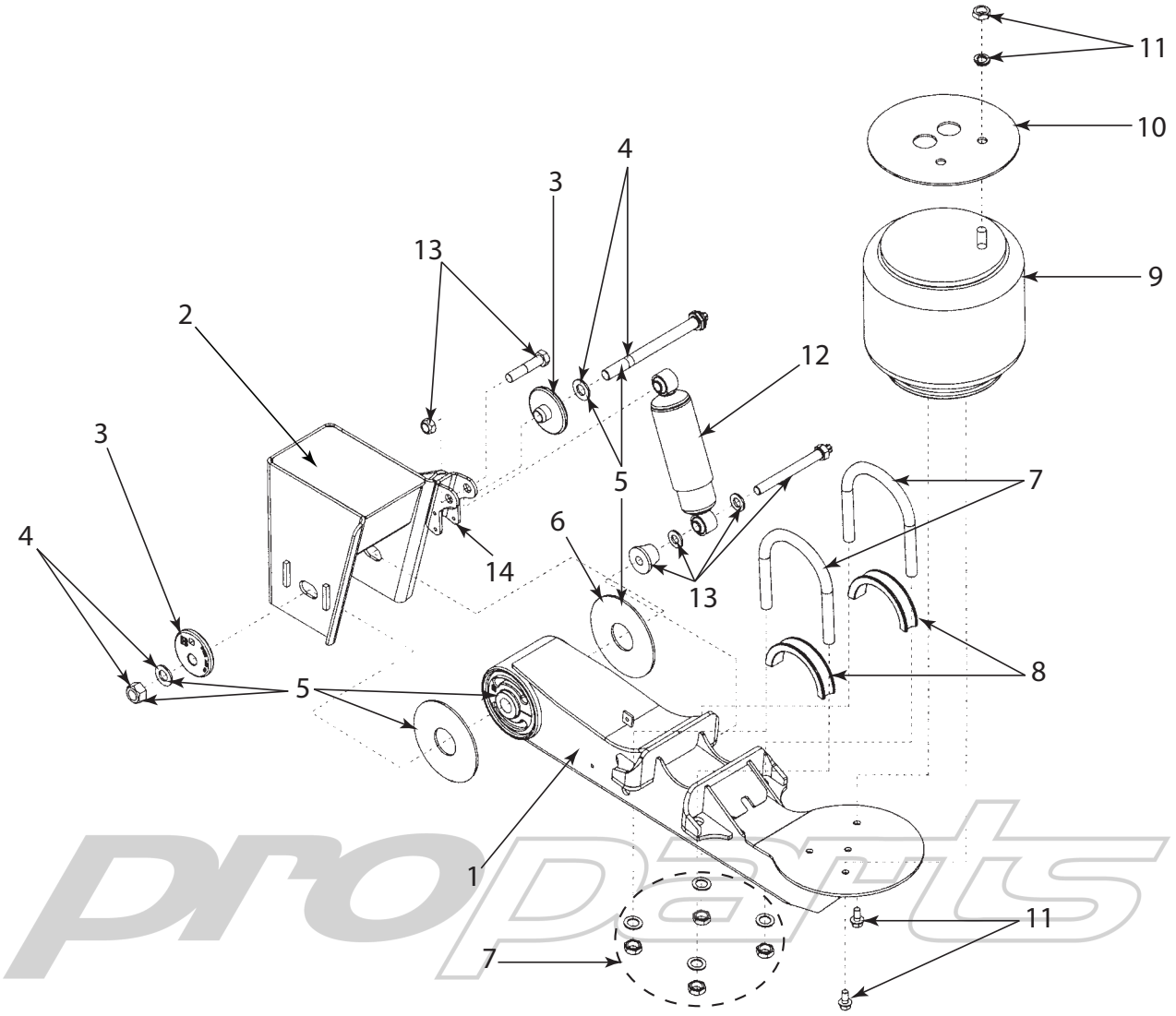

Item	Part Number	Description	Item	Part Number	Description
1	S-24186-1	Beam Assembly - L.H.	4	S-31623	Pivot Bolt - Quik Align
	S-24186-2	Beam Assembly - R.H.		S-31625	Pivot Bolt Kit c/w Align Collars
2		Hanger - Weld On L.H. & R.H.			
	C-23848-1 & 2	8” Overall Height	5	S-31624	Pivot Bush Kit - Quik Align c/w S-31623 x 1 & S-21099 x 2
	D-22826-1 & 2	11.5” Overall Height			
	D-22827-1 & 2	13.5” Overall Height	6	S-21099-4P	Wear Pad (4 Pack)
	D-22828-1 & 2	15.5” Overall Height	7	S-21140	U Bolt Kit (Kit of 4)
	D-22829-1 & 2	17.5” Overall Height	8	B-20701	Axle Spacer - U Bolt
		Hanger - Bolt On L.H. & R.H.	9	C-20127	Air Spring
	D-23009-1 & 2	11.875” Overall Height		C-20124	Air Spring
	D-23010-1 & 2	13.875” Overall Height			* Check Number On Bag *
	D-23011-1 & 2	15.875” Overall Height	10	B-21209	Air Spring Mount Plate
	D-23012-1 & 2	17.875” Overall Height	11	S-20033	Air Spring Mount Kit
3	C-20924	Alignment Collar - Quik Align - Concentric	12	S-23743	Shock Absorber
			13	S-24024	Shock Bolt Kit
	C-20925	Alignment Collar - Quik Align - Eccentric	14	S-2592	Upper Shock Clevis - Standard
				C-20113	Upper Shock Clevis - For Use With Shock Straps

*Different Options Are Available For Items 7, 9, 10, 12

Hendrickson Intraax Air Suspension

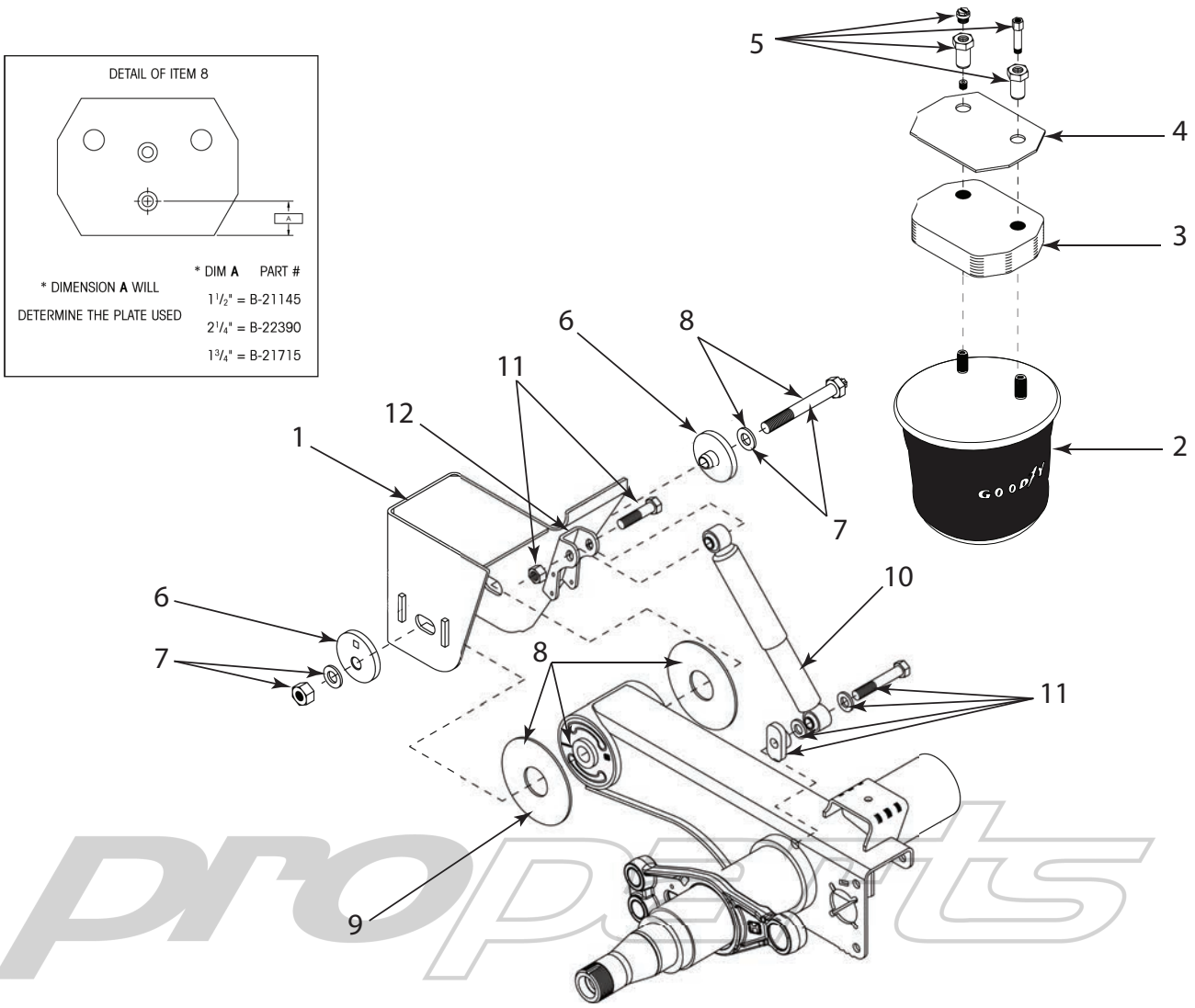

Item	Part Number	Description	Item	Part Number	Description
1		Hanger - Suit AAT 23K, 25K & 30K Models L.H. & R.H.	4	B-20905	Air Spring Mount Plate - All Weld-on Applications - (See Chart Above for Bolt-on Applications)
	C-21028-1 & 2	8” Overall Height, Winged			
	D-21082-1 & 2	10” Overall Height, Winged	5	S-22619	Air Spring Mount Kit
	D-21905-1 & 2	8” Overall Height, Wingless	6	C-20924	Alignment Collar - Quik Align - Concentric
	D-21906-1 & 2	10” Overall Height, Wingless			
		Hanger - Suit AAEDT 30K		C-20925	Alignment Collar - Quik Align - Eccentric
	D-24766-3L & R	10” Overall Height, Winged			
	D-24766-4L & R	12” Overall Height, Winged	7	S-31623	Pivot Bolt - Quik Align
	D-24766-5L & R	14” Overall Height, Winged		S-31625	Pivot Bolt Kit c/w Align Collars
	D-24767-4L & R	12” Overall Height, Wingless			
2	S-21800	Air Spring AAT23K after ‘96	8	S-31624	Pivot Bush Kit - Quik Align c/w S-31623 x 1 & S-21099 x 2
	C-21784	Air Spring AAT23K before ‘96 & AAT25K	9	S-21099-4P	Wear Pad (4 Pack)
	S-25873	Air Spring AAT30K Model	10	S-24023	Shock Absorber
	S-25319	Air Spring AAEDT30K Model	11	S-24049	Shock Bolt Kit (Upper & Lower)
3	B-22510-1	Spacer - 1 1/8” Thick		S-24021	Shock Bolt Kit (Lower Only)
	B-22510-2	Spacer - 1 7/8” Thick		S-20918	Shock Clevis - Upper
	B-22510-3	Spacer - 3 1/8” Thick			
			*	98918-001	Shock Strap Kit (2 Pack)

*Different Options Are Available For Items 2, 3, 5, 10, 11

Freighter Maxi-cube Queensland

Hendrickson Maxitraax Air Suspension

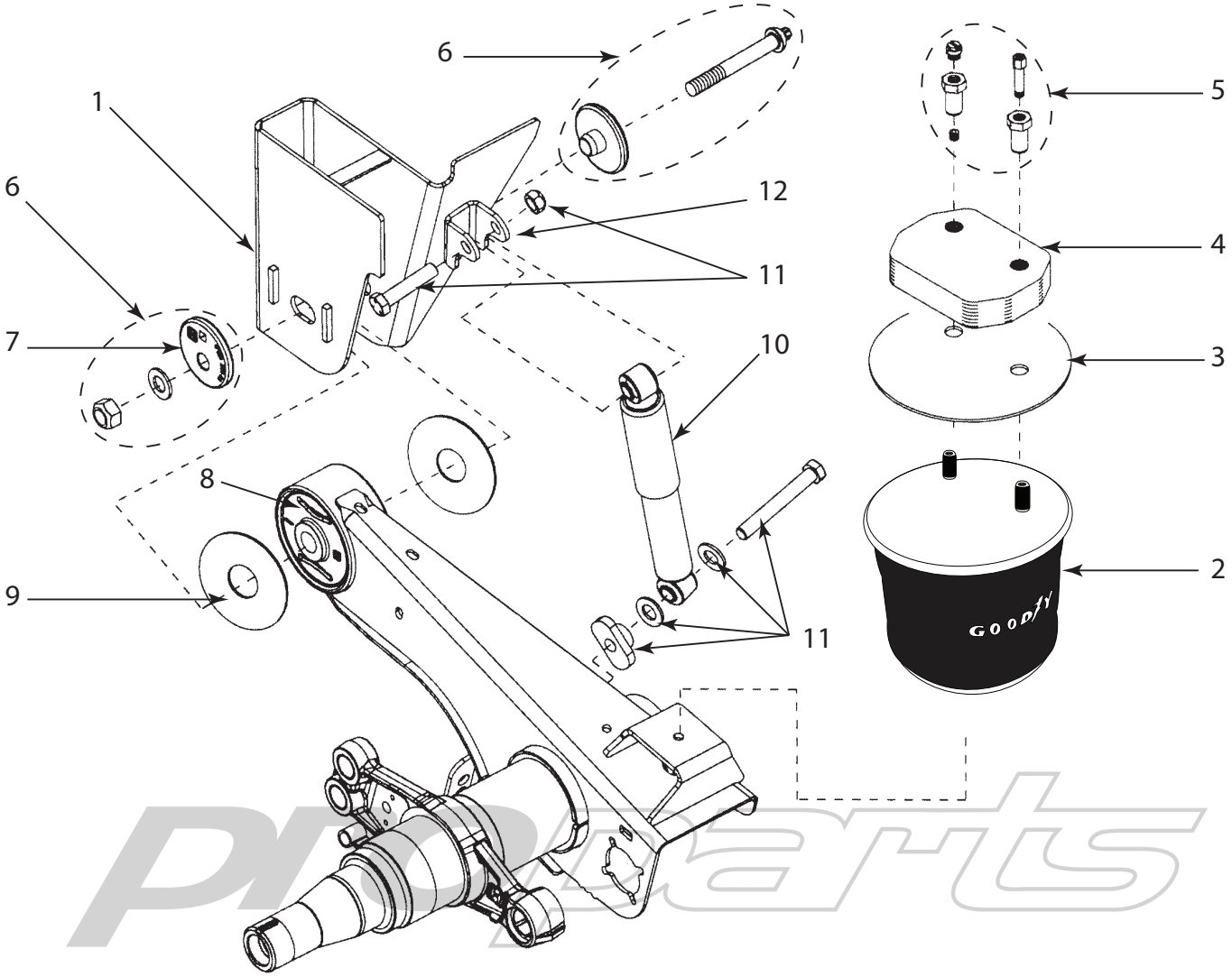

Item	Part Number	Description	Item	Part Number	Description
1	S-26105-1L	Hanger - L/H	9	S-26807-4P	Nylon Wear Pad - 70mm Centre Hole - (Used June '03 Onwards) - (4 Pack)
	S-26105-1R	Hanger - R/H			
2	S-21800	Air Spring			
3	B-20905	Air Spring Mount Plate		S-21099-4P	Nylon Wear Pad - 60mm Centre Hole - (Used Pre June '03) - (4 Pack)
4	S-22510-1	Spacer - 1 1/8" Thick			
5	S-22630	Air Spring Mount Kit			
6	S-24704	Pivot Bolt Kit c/w Align Collars	10	S-21699	Shock Absorber - (Metal Shield - Road Friendly)
7	C-20924	Alignment Collar - Quik Align - Concentric		98583-011	Shock Absorber - (Plastic Shield - Road Friendly)
	C-20925	Alignment Collar - Quik Align - Eccentric		S-20889	Shock Absorber - (Metal Shield - Non-Road Friendly) *Check Part # of Shocks Fitted*
8	S-24706	Pivot Bush Kit c/w 2 x Pivot Bushes, 4 x Nylon Wear Pads & 2 x Pivot Bolts (Does not come with Align Collars)	11	S-24049	Shock Bolt Kit (Does 2 Shocks)
			12	S-20918	Shock Clevis - Upper

*When Replacing Shocks Both Sides Should Be Changed At The Same Time.
Also The Same Part Number Shock Should Be Fitted On Both Sides.

York Tecair 1 Air Suspension

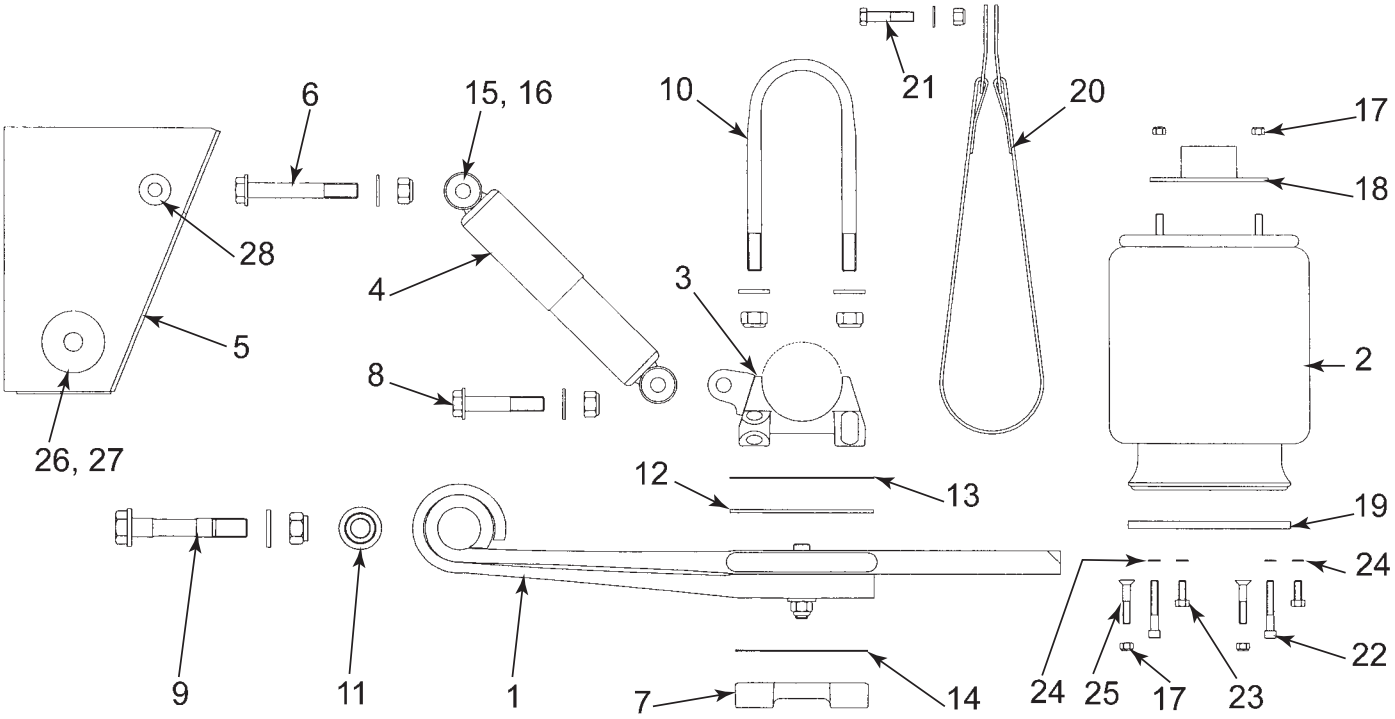

Item	Part Number	Description	Item	Part Number	Description
1	61SB507570	Spring - 11 Tonne c/w Bush	12	61506234	Tracking Plate
	787800	Spring - 9 Tonne c/w Bush	13	61506284	Shim - Upper
2	505859-01	Air Spring - 300- 400 R/Ht	14	61506294	Shim - Lower
	FQ7763	Air Spring - 200 R/Ht	15	61787673	Shock Bush
3	787850	Axle Seat c/w Lugs & Spacers	16	61787837	Sleeve - Shock Bush
			17	49LNM12	Nyloc Nut M12
4	506717-01	Shock Absorber - Bar Pin Style	18	61506196	Air Bag Top Plate
			19	61787688	Air Bag Bottom Plate
	506717-02	Shock Absorber - Eye Style	20	61786866/970	Axle Strap 200mm R/Ht
5	61507121	Front Hanger		786866/1170	Axle Strap 300mm R/Ht
	61507741/02	Front Hanger - 300mm R/Ht		61786866/1270	Axle Strap 350mm R/Ht
	61507741/03	Front Hanger - 350mm R/Ht		786866/1370	Axle Strap 400/450/500/ 600mm Ride Heights
	61507741/04	Front Hanger - 400mm R/Ht			
	61507741/05	Front Hanger - 450mm R/Ht	21	61SB786154	Bolt suit Nylon Axle Strap
	61507741/06	Front Hanger - 500mm R/Ht		61SB786155	Bolt suit Wire Axle Strap
	61787699	Front Hanger - 600mm R/Ht	22	SHM12175080	Socket Head Bolt M12 x 80
6	49HBM24300180	Top Shock Bolt Assy	23	49HBM12175030	Hex Bolt M12 x 30
7	61506235	Spring Clamp Plate	24	49SWM12	Spring Washer M12
8	49HBM24300130	Bottom Shock Bolt Assy	25	49CSM12175070	C/Sunk Bolt M12 x 70
9	506247	Pivot Bolt Assy	26	506227	Pivot Boss
10	506245-320	U Bolt M24 x 320mm	27	506226	Wear Pad
11	FQ1118	Pivot Bush	28	61506225/01	Shock Boss pre '95(shouldered)
				61506225/02	Shock Boss post '95(straight)

York Tecair 2 Air Suspension

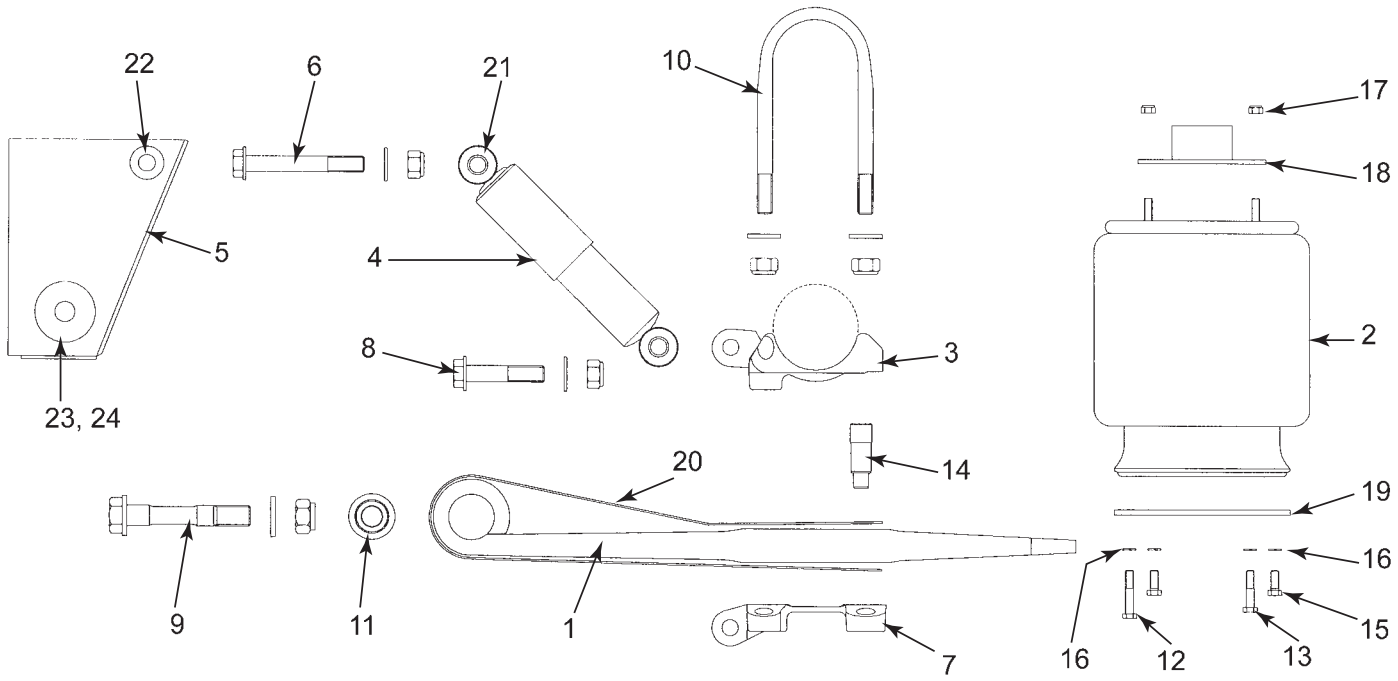

proparts

Item	Part Number	Description	Item	Part Number	Description
1	787800	Spring - 9 Tonne c/w Bush	18	61506196	Air Bag Top Plate - 235/420 Ride Height
2	FQ7763	Air Spring		61506190/01	Air Bag Top Plate - 260/445 Ride Height
3	61787801	Axle Seat		61506190/03	Air Bag Top Plate - 285/470 Ride Height
4	787803	Shock Absorber		61506190/08	Air Bag Top Plate - 310/495 Ride Height
5	6178705	Front Hanger - 235/420 R/Ht		61506190/04	Air Bag Top Plate - 335/520 Ride Height
	61787805/5	Front Hanger - 260/445 R/Ht		61506190/07	Air Bag Top Plate - 360/545 Ride Height
	61787805/1	Front Hanger - 285/470 R/Ht	19	61787832	Air Bag Bottom Plate
	61787805/6	Front Hanger - 310/495 R/Ht	20	787830	Wrapper Leaf suit Spring
	61787805/2	Front Hanger - 335/520 R/Ht	21	FQ7748	Shock Bush
	61787805/3	Front Hanger - 360/545 R/Ht	22	61506225/01	Shock Boss pre ‘95(shouldered)
6	49HBM24300180	Top Shock Bolt Assy		61506225/02	Shock Boss post ‘95(straight)
7	787807	Spring Clamp Plate	23	787805/10	Hanger Pivot Boss
8	49HBM24300130	Bottom Shock Bolt Assy	24	61787805/11	Hanger Wear Pad
9	506247	Pivot Bolt Assy			
10	506245-270	U Bolt M24 x 270mm	*	KN27000	Height Cont. Valve (Std)
11	FQ1118	Pivot Bush	*	KN27013	H/C Valve (Instant Responsponse)
12	49HBM12175065	Hex Bolt M12 x 65mm			
13	49HBM12175055	Hex Bolt M12 x 55mm			
14	61787804	Dowel Pin suit Spring			
15	49HBM12175030	Hex Bolt M12 x 30mm			
16	49SWM12	Spring Washer M12			
17	49LNM12	Nyloc Nut M12			

Freighter Maxi-cube Queensland

York Tecair FB 3 Air Suspension

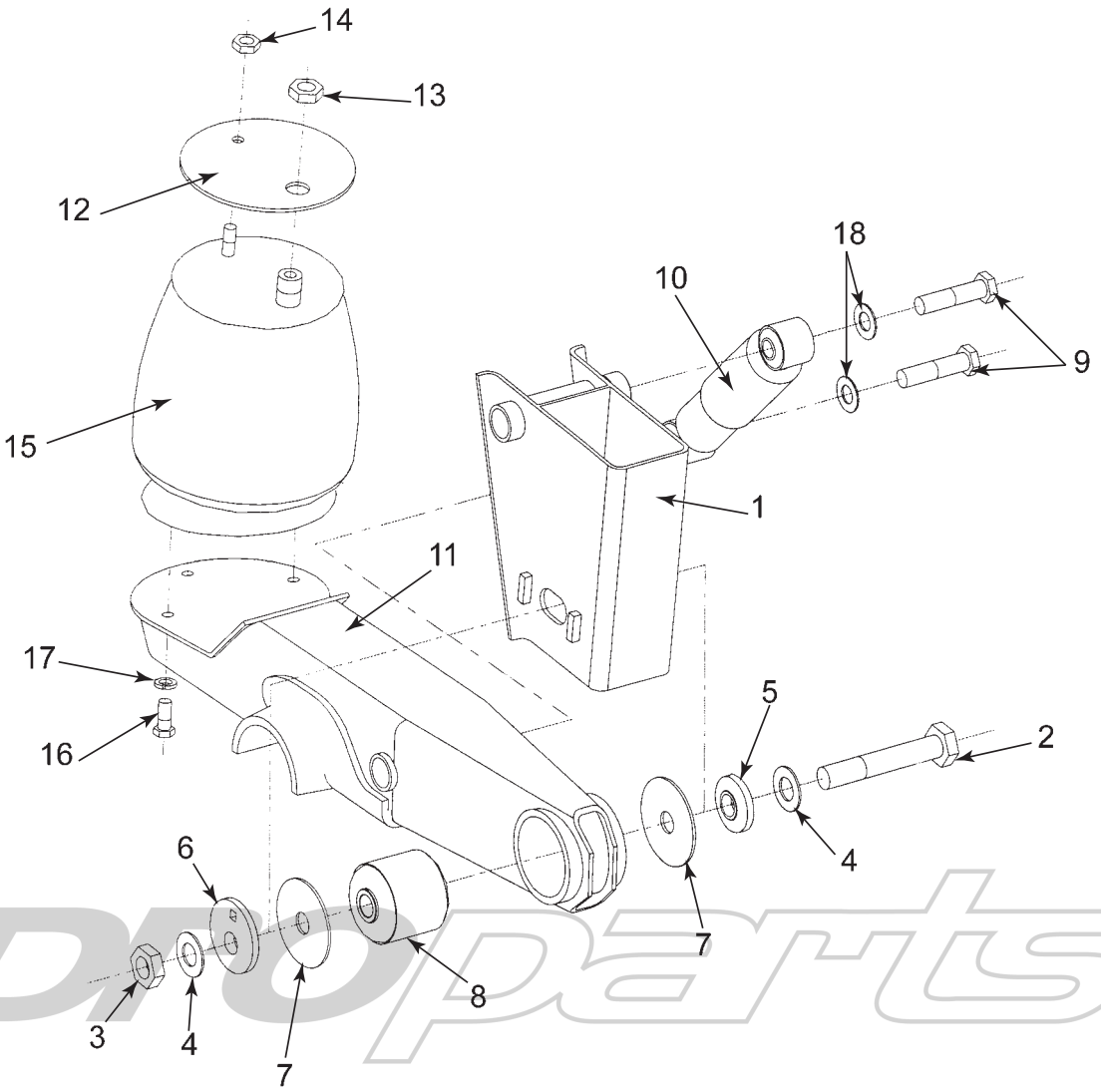

Item	Part Number	Description	Item	Part Number	Description
1	61610414/1/01	Front Hanger - L/H	12	61610156	Airbag Top Plate
	61610414/1/02	Front Hanger - R/H	13	FQ1266	Nyloc Nut 3/4” UNF
2	506247	Pivot Pin Assy	14	FQ0159-2	Nyloc Nut 1/2” UNC
3	754448	Nyloc Nut M30	15	FQ7775	Airbag
4	506470/30	Flat Washer M30	16	49HB1/2UNC1.50	Hex Bolt 1/2” UNC x 1 1/2”
5	61792123	Inner Washer			
6	61792120	Cam Ring	17	49SW1/2	Spring Washer 1/2”
7	61792124	Thrust Washer	18	49FWM24	Flat Washer M24
8	61610411/01	Pivot Bush	19	61SB610411	Pivot Bush Repair Kit includes
9	49HBM24300100	Shock Absorber Bolt			1 x Pivot Bush
10	61610442	Shock Absorber			2 x Thrust Washer
	61610464	Shock Absorber Bush			2 x Flat Washer M30
11	61610400/01	Beam Assy Underslung L/H			1 x Pivot Pin
	61610400/02	Beam Assy Underslung R/H			1 x Lock Nut
	61610404/01	Beam Assy Overslung L/H			
	61610404/02	Beam Assy Overslung R/H			

York Tecair FB VRH Air Suspension

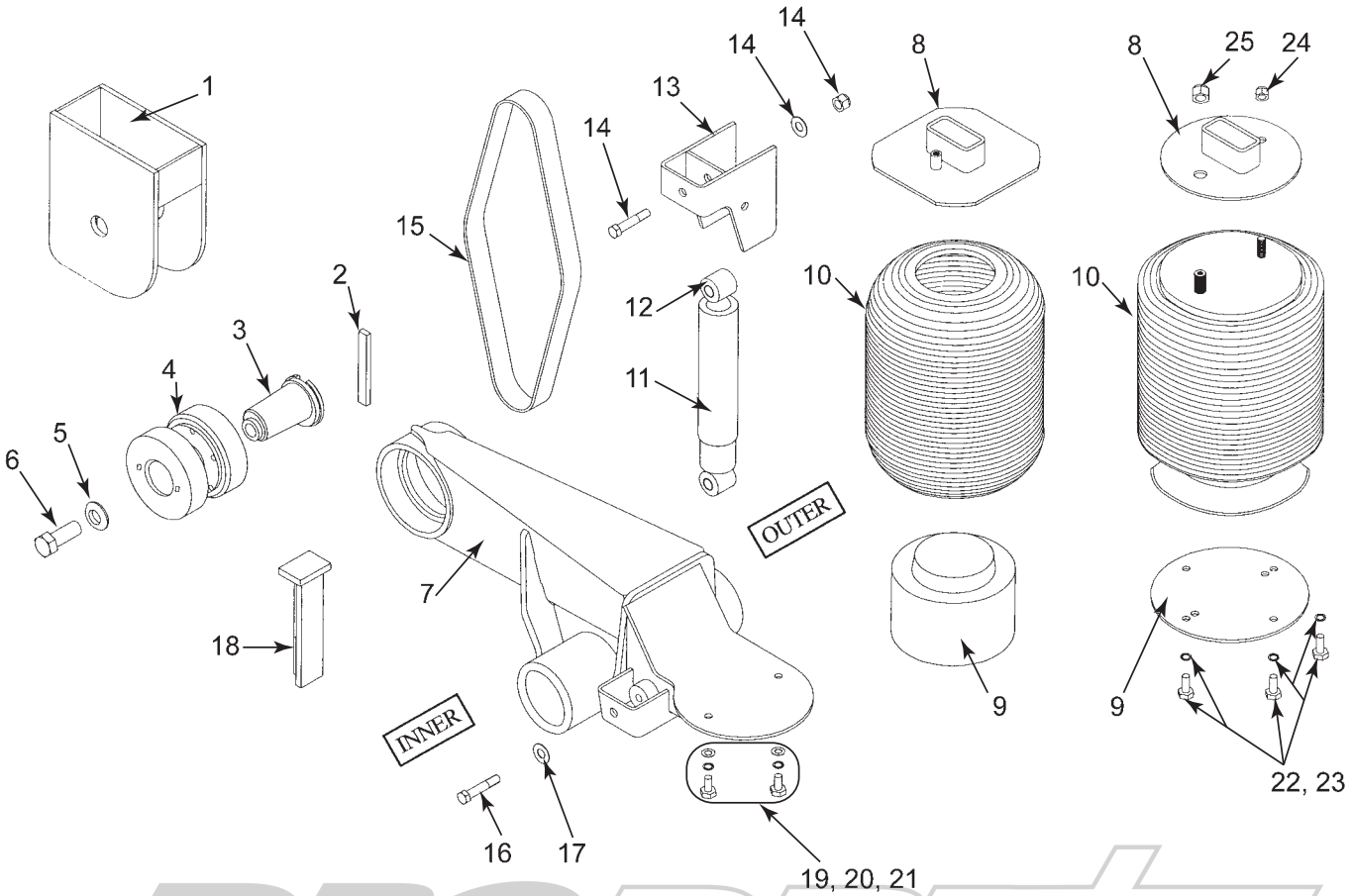

Item	Part Number	Description	Item	Part Number	Description
1	61610207/01	Front Hanger - 190/360 Ride Height, L/H	10	FQ7758	Airbag (Non Sealed)
				FQ7755	Air Bag (Sealed)
	61610207/02	Front Hanger - 190/360 Ride Height, R/H	11	61610052	Shock Absorber
			12	61610234/01	Shock Bush
	61610208/01	Front Hanger - 235/405 Ride Height, L/H		61610234/02	Shock Bush Sleeve
			13	61610054	Top Shock Bracket
	61610208/02	Front Hanger - 235/405 Ride Height, R/H	14	61SB786157	Top Shock Bolt Assy
			15	610065/05	Shock Strap - Red
	61610209/01	Front Hanger - 280/450 Ride Height, L/H		61786866/590	Shock Strap - Green (U/Slung, Heavy Duty)
	61610209/02	Front Hanger - 280/450 Ride Height, R/H	16	49HB5/8UNC3.25	Hex Bolt 5/8” UNC x 3 1/4
			17	FQ0171	Flat Washer 5/8”
2	610008	Locking Bar - Front Hanger	18	61610067	Chassis Stop 190/235/280
3	610009	Pivot Pin		61610067/1	Chassis Stop 360/405/450
4	FQ1116/7	Pivot Bush Kit 1 x Inner, 1 x Outer	19	49HBM12175030	Hex Bolt M12 x 30 (N/Sealed)
			20	49SWM12	Spring Washer M12 (N/S)
5	610010	Locating Washer - Pivot Pin	21	49FWM12	Flat Washer M12 (N/Sealed)
6	610011	Locating Bolt - Pivot Pin	22	49HB1/2UNC1.50	Bolt 1/2”UNC x 1 1/2 (Sealed)
7		O/S / U/S Beam (Refer York)	23	49SW1/2	Spring Washer 1/2” (Sealed)
8	61610205	Airbag Top Mount (Non Sealed)	24	49LN1/2UNC	Nyloc Nut 1/2”UNC (Sealed)
	61610156	Airbag Top Mount (Sealed)	25	49LN3/4UNC	Nyloc Nut 3/4”UNC (Sealed)
9	610043	Airbag Piston (Non Sealed)	*	KN27000	Height Cont. Valve (Std)
	61610128	Airbag Bottom Plate (Sealed)	*	KN27013	H/C Valve (Instant Responsponse)

York Tecair FB Air Suspension

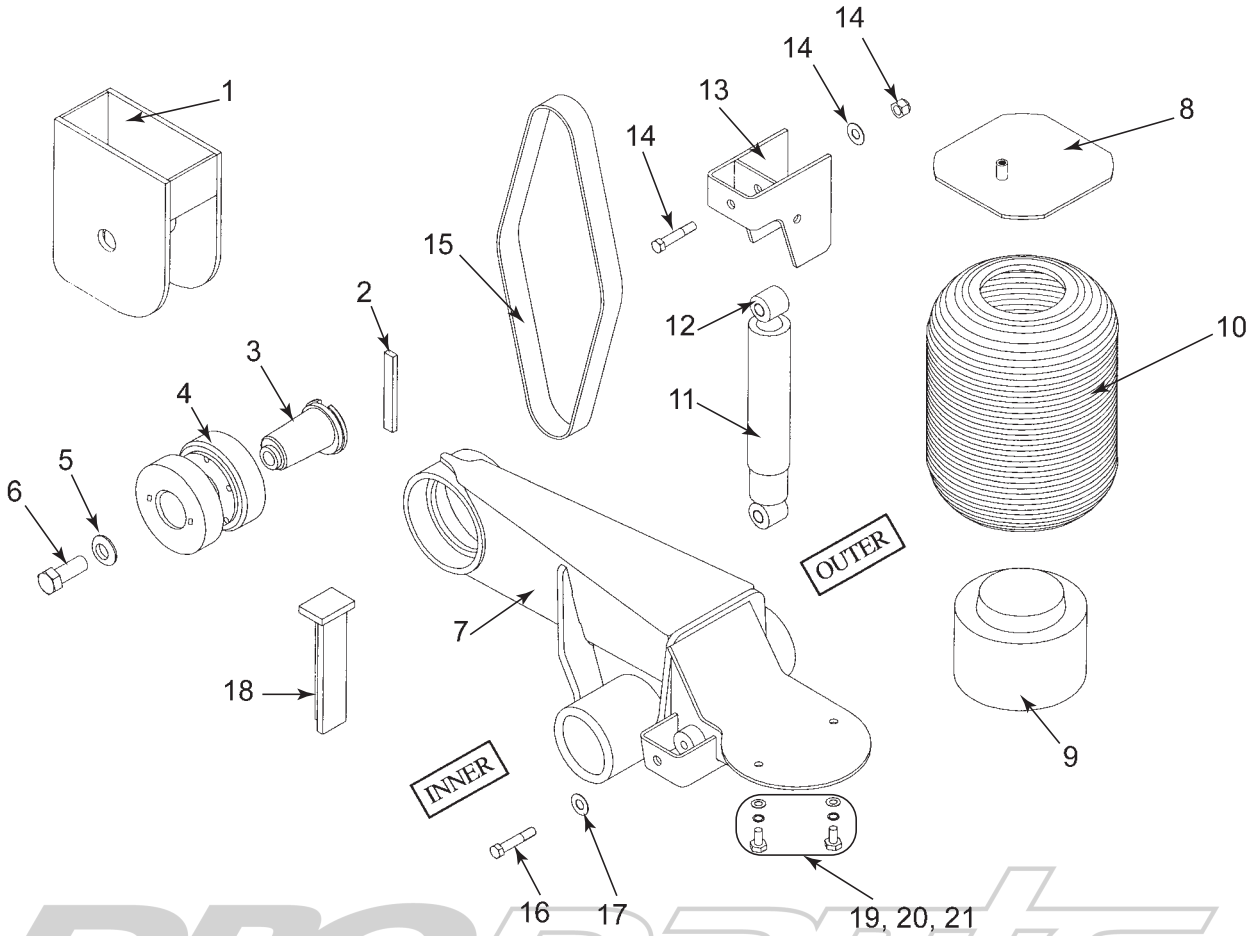

Item	Part Number	Description	Item	Part Number	Description
1	61610001/01	Front Hanger - L/H		61610234/01	Shock Bush (Boge)
	61610001/02	Front Hanger - R/H		61610234/02	Shock Bush Sleeve (Boge)
2	610008	Locking Bar - Front Hanger	13	61610054	Top Shock Bracket (Std)
3	610009	Pivot Pin		61610055	Top Shock Brkt (Subframe)
4	FQ1116/7	Pivot Bush Kit	14	61SB786157	Top Shock Bolt Assy
		1 x Inner, 1 x Outer	15	610065/01	Shock Strap - Blue
5	610010	Locating Washer - Pivot Pin			150/300/370 Ride Height
6	610011	Locating Bolt - Pivot Pin		61610065/03	Shock Strap - Black
7		O/S / U/S Beam (Refer York)			190/400/420 Ride Height
8	61610205	Airbag Top Mount		61786866/590	Shock Strap - Green
9	610043	Airbag Piston (720N)			Underslung, Heavy Duty
	610044	Airbag Piston (644N)	16	49HB5/8UNC3.25	Hex Bolt 5/8” UNC x 3 1/4
	61610128	Airbag Bottom Plate (sealed)	17	FQ0171	Flat Washer 5/8”
10	FQ7758	Airbag (720N) 190/400 R/Ht	18	61610067	Chassis Stop
	FQ7759	Airbag (644N) 150/300/370	19	49HBM12175030	Hex Bolt M12 x 30
	FQ7755	Airbag - Sealed 190/400	20	49SWM12	Spring Washer M12
	FQ7780	Airbag - Sealed 150/300/370	21	49FWM12	Flat Washer M12
11	61610052	Shock Absorber 190/400	*	KN27000	Height Cont. Valve (Std)
	61610053	Shock Absorber 150/300/370	*	KN27013	H/C Valve (Instant Responsponse)
12	61610129	Shock Bush 190/400 Ride Ht			
	61610062	Shock Bush 150/300/370			

BPW SL Series Air Suspension

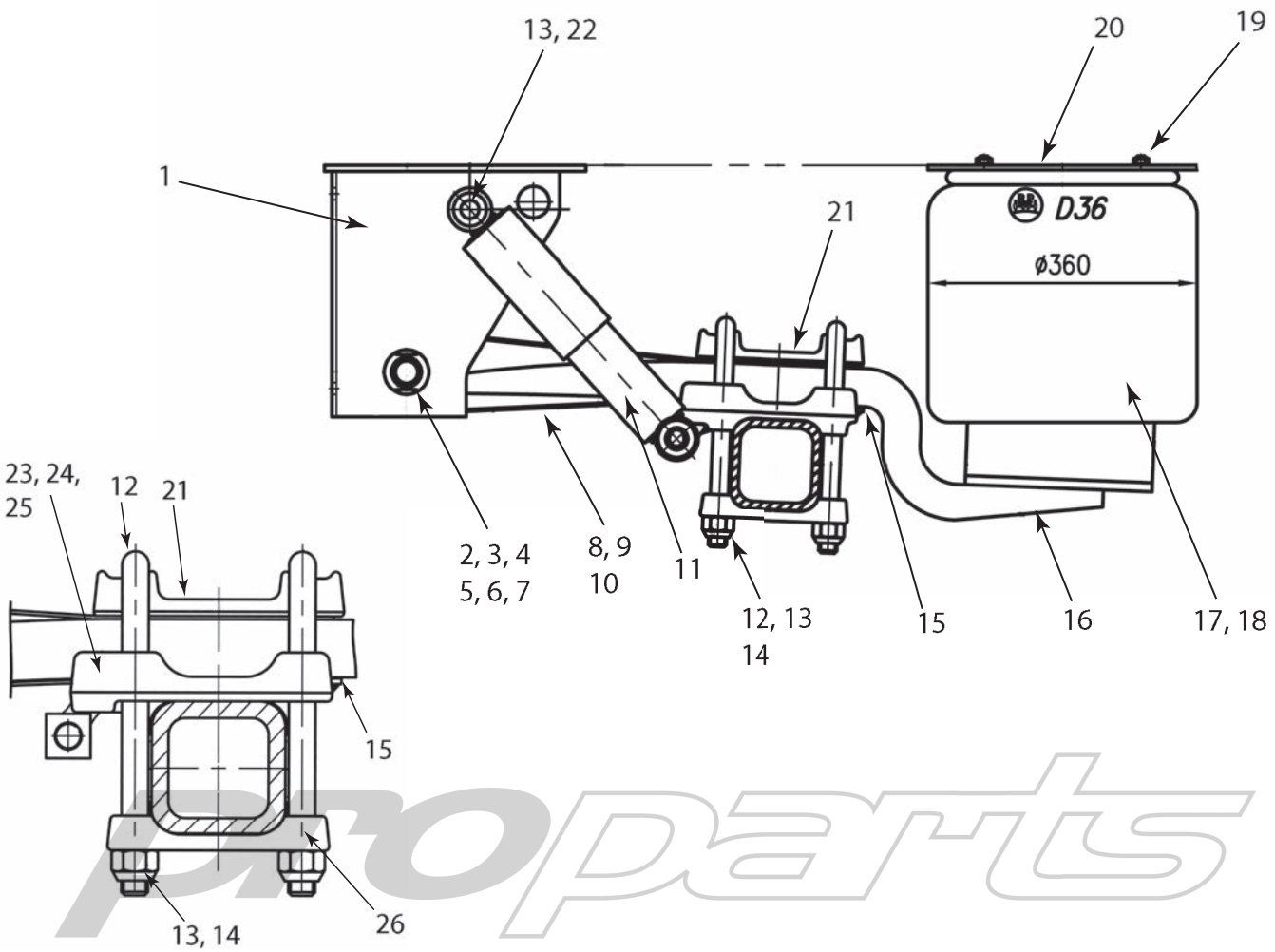

Item	Part Number	Description	Item	Part Number	Description
1	0537563480MTPL	Hanger L/H inc items 6, 7 & 21.	13	0252207412	Lock Nut M24
			14	0254012507	Washer - U Bolt Ø 25 ID
	0537563480MTPR	Hanger L/H inc items 6, 7 & 21.	15	0328136140TS	Alignment Plate c/w Locating Dowel
2	FQ1113S	Bush (SRS) Ø30 x 57 x 102	16	0250709500	Screw - Airbag M16 x 65
3	FQ1234	Bolt - Spring Eye M30 x 190	17	FQ7750G	Airbag Bellows - D36
4	FQ1253	Washer - Spring Eye Ø30 ID	18	FQ7750CG	Airbag Assy - D36 c/w items 18 & 19
5	FQ1235	Lock Nut - Spring Eye M30			
6	FQ1251	Wear Washer	19	0252733380	Lock Nut - Airbag M12
7	FQ1250	Hanger Boss	20	0328547240TS	Mounting Plate - Airbag
8	0508213190	Leaf Spring inc item 2.	21	0314510390	Spring Cap
9	0534830050	Strap - Leaf Spring inc item 10.	22	0317724290	Shocker Bolt - Weld In
			23	0303221058	Axle Seat - L/H
10	0337900270	Grommet - Anti Rattle		0303221068	Axle Seat - R/H
11	0237228300	Shock Absorber - Genuine	24	0317724170/170	Shock Peg
	P53024	Shock Absorber - Powerdown	25	0316184040TS	Side Plate
			26	0303217050	Bottom Plate
12	0313844083	U Bolt - M24 x 125 x 280			

BPW Heavy Duty OT Series Air Suspension

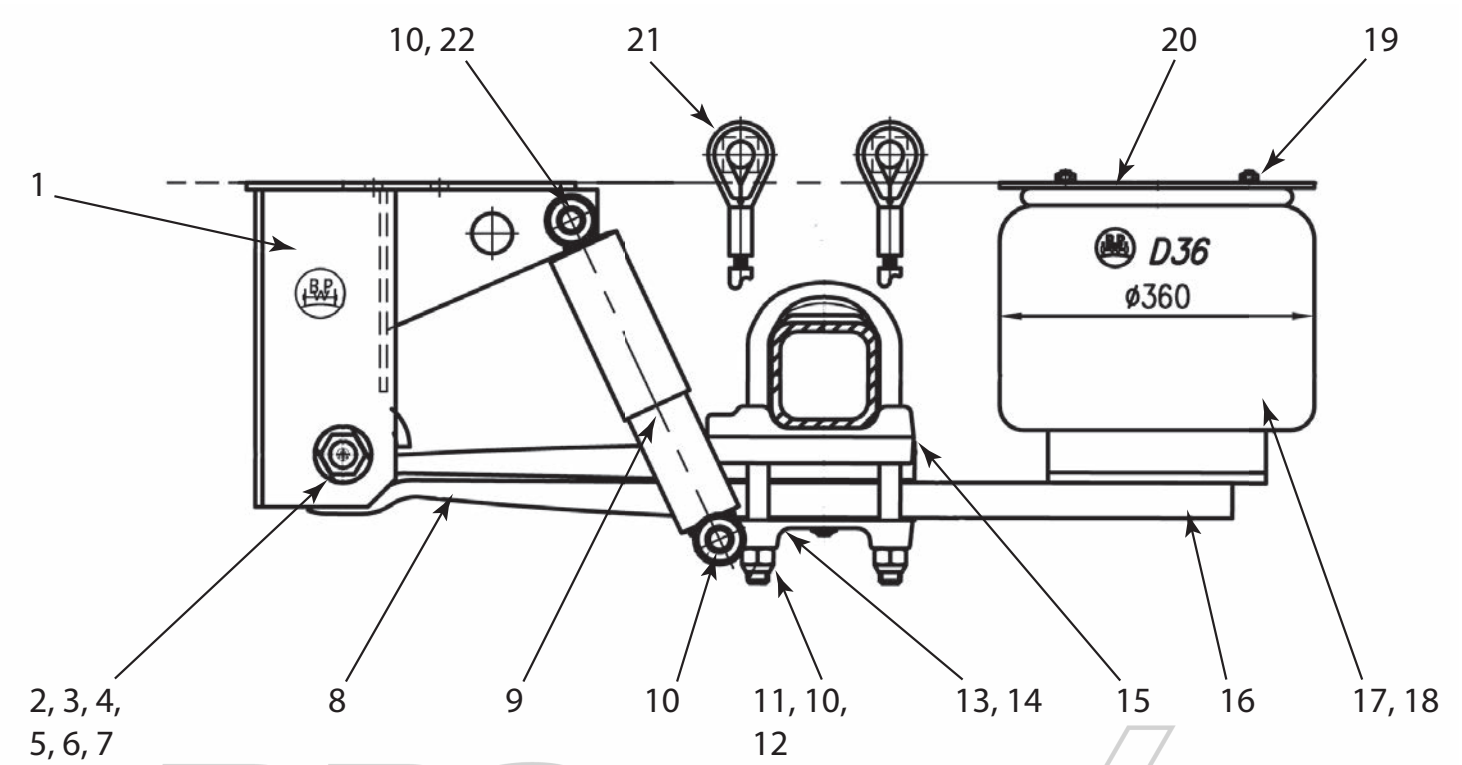

proparts

Item	Part Number	Description	Item	Part Number	Description
1	AS-0110B	Hanger L/H & R/H inc items 6, 7 & 22.	10	0252207412	Lock Nut M24
			11	0313841080	U Bolt M24 x 152 x 320
2	FQ1113S	Spring Eye Bush (SRS) Ø30 x 57 x 102	12	0254012507	Washer - U Bolt Ø 25 ID
			13	0514522090	Spring Plate L/H
3	FQ1234	Bolt - Spring Eye M30 x 190	14	0514522080	Spring Plate R/H
			15	0328137080	Alignment Plate
4	FQ1253	Washer - Spring Eye Ø30 ID	16	0250709500	Screw - Airbag Base M16 x 65
5	FQ1235	Lock Nut - Spring Eye M30	17	FQ7750G	Airbag Bellows - D36
			18	FQ7750CG	Airbag Assy - D36 c/w items 18 & 19
6	FQ1251	Wear Washer			
7	FQ1250	Hanger Boss	19	0252733380	Lock Nut - Airbag M12
8	0508212830	Leaf Spring Assembly c/w item 2	20	0328547240TS	Airbag Mount Plate 6mm Thick
9	0237228300	Shock Absorber - Genuine	21	0532714050	Catch Strap (L = 1010)
	P53024	Shock Absorber - Powerdown	22	0334014120	Shock Bolt